DN	D	D1	D2	b	L	n-Ød	f
50	165	127	92.1	32.4	300	8-Ø19	7

APPROVED

PRESSURE TEST	
CLASS	600LB
SHELL	15.6MPa
SEAT	11.4MPa
TEMP	-29~370℃
MEDIA	Superheated Steam

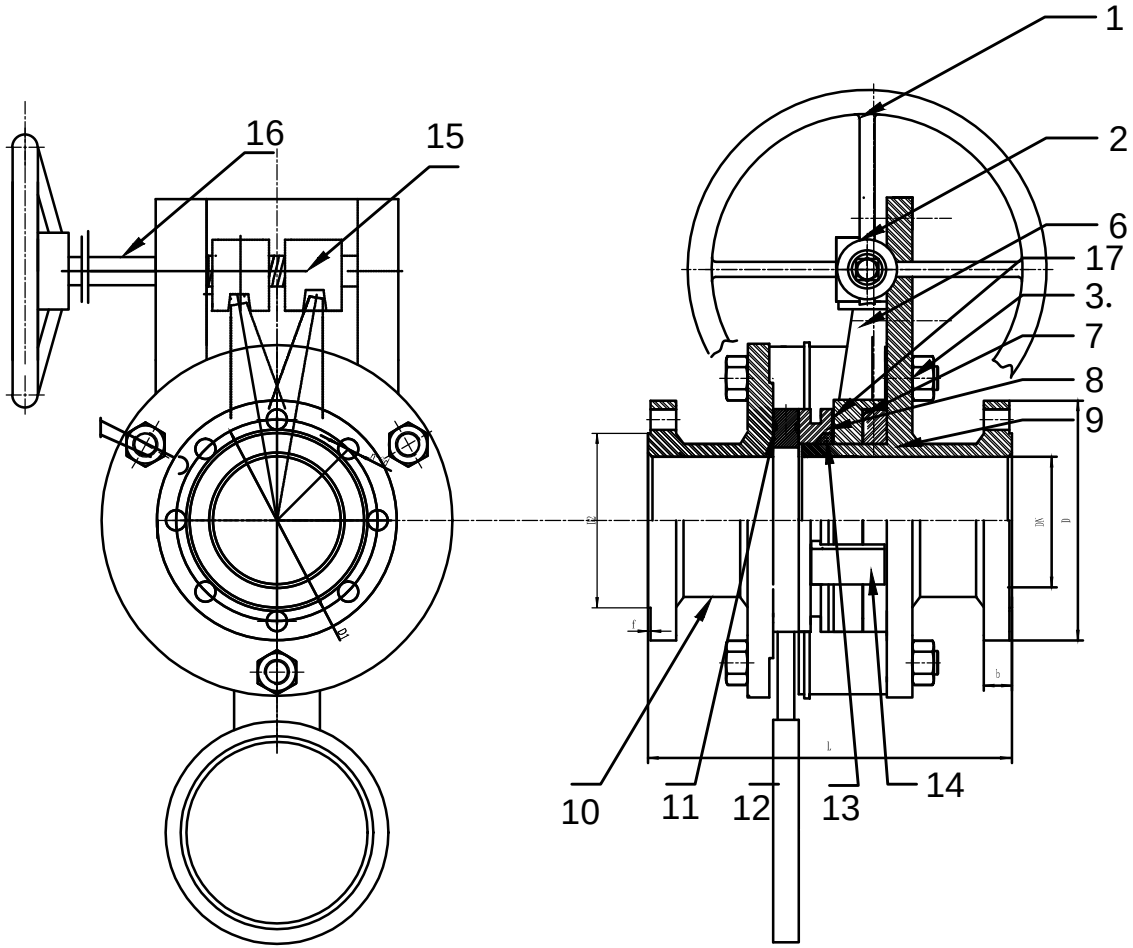

Technical Requirement

1. Design & Manufacture conform To ASME B16.34
2. Face to face dimension conform to supplier's standards.
3. Design & Manufacture conform To ASME B16.34

NO	CODE	ITEM	QTY	MATERIAL
17		Gasket	1	
16	XF100-9	Driving Rod 传动丝杆	1	20cr13
15	XF100-8	Driving Nut 传动螺母	1	Brass 黄铜
14		Seat Fixing 阀座固定块	1	304
13	XF100-7	Seat Gasket 垫片	1	Graphite
12		Disc 阀板		SS347
11	XF100-6	Blind Gasket	1	金属缠绕垫片
10		Body-1 左阀体	4	F22
9	XF100-5	Body-2 右阀体	1	F22
8	XF100-4	Seat 活动阀座	1	SS347
7		Slack Thread 松紧螺纹机构	2	A105
6	XF100-3	Support Plate 旋动杆座板	1	Q235-A
5		GASKET 垫片	8	Q235-A
4		NUT 螺母	4	A194-7
3		Screw 支撑螺杆	4	A193-B16
2	XF100-2	Stem Support 旋动杆座	2	Q235-A
1	XF100-1	Handwheel 手轮	1	Q235-A

SWING TYPE BLIND VALVE

摆动式盲板阀KF41S-600LB

DERVOS VALVE CO., LTD